FleetHeat™
BY VEHTEC

INSTALLATION GUIDE 2022

TABLE OF CONTENTS

1. GENERAL ……..P.3

2. APPLICATION STRUCTURE ……...P.4

- 2.1 VEHICLES
- 2.2 SCHEDULES
- 2.3 CREATE FILE FOR IMPORT
- 2.4 HEATER PROFILES
- 2.5 BUS DEPOTS
- 2.6 ALARMS
- 2.7 REPORTS
- 2.8 MAP
- 2.9 ECONOMY
- 3.0 SETTINGS

3. INSTALLATION GUIDE ……...P.11

4. TROUBLESHOOTING ……P.17

VEHTEC

VEHTEC.SE

VEHTEC GOTHENBURG • KRÅKETORPSGATAN 10 B • SE-431 53 MÖLNDAL • SWEDEN • +46(0)31-787 89 00
VEHTEC STOCKHOLM • SELAÖVÄGEN 1 • SE-124 59 BANDHAGEN • SWEDEN • +46(0)8-749 21 77
VEHTEC ORDER MAIL • INFO@VEHTEC.SE • VEHTEC.SE

ON MAY 25TH 2018 THE NEW GENERAL DATA PROTECTION REGULATION CAME INTO FORCE
PLEASE TAKE A LOOK AT OUR UPDATED PRIVACY POLICY ON OUR WEBSITE

1. GENERAL

FleetHeat is the intelligent heating system that simplifies traffic management and provides an economical and effective heating solution.

The system monitors the vehicle's temperature and matches it to the scheduled departure time, thus activating the heater at the optimum time before departure. At too low temperatures or battery levels, an alarm is activated, all to ensure your bus is ready for traffic.

Welcome to a smart bus depot!

2. APPLICATION STRUCTURE

2.1 VEHICLES

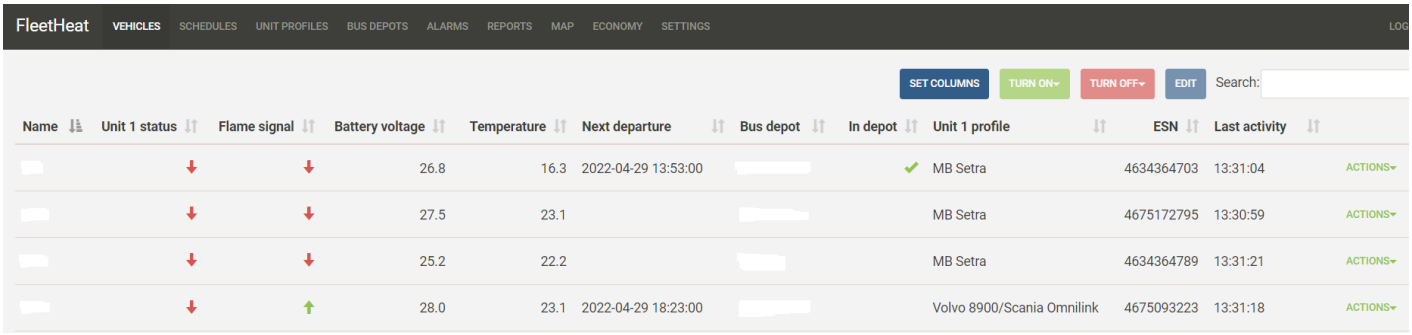

Fleet overview

Name - Bus identity

Unit 1 status - Indicates if the start signal is sent from FleetHeat

Flame signal - Shows if the heater has started

Battery voltage - Current battery level

Temperature - Temperature at driver's seat

Next departure - Scheduled departure time

Bus depot - Shows which depot the bus is assigned to

In depot - Shows if the bus is in the depot

Unit profile - Determines heating time for that vehicle

ESN - FleetHeat unit serial number

Last activity - Updates every 5 seconds to control that the unit has good connection

Actions - History graph on temperature and battery level

2.2 SCHEDULES (SCHEDULED DEPARTURES)

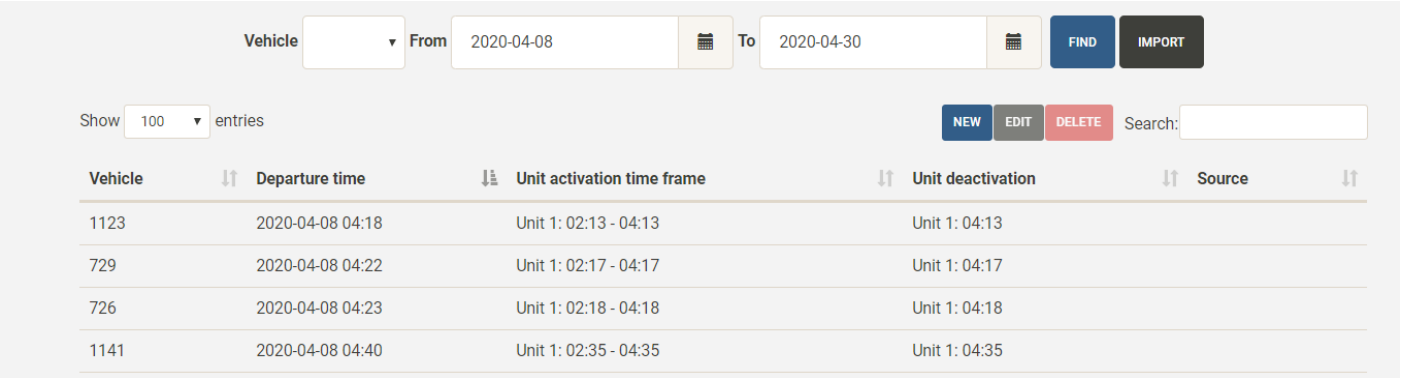

Vehicle	Departure time	Unit activation time frame	Unit deactivation	Source
1123	2020-04-08 04:18	Unit 1: 02:13 - 04:13	Unit 1: 04:13	
729	2020-04-08 04:22	Unit 1: 02:17 - 04:17	Unit 1: 04:17	
726	2020-04-08 04:23	Unit 1: 02:18 - 04:18	Unit 1: 04:18	
1141	2020-04-08 04:40	Unit 1: 02:35 - 04:35	Unit 1: 04:35	

By clicking "find" you can see scheduled departures

Vehicle - Bus identity.

Departure time - The time that the bus leaves the depot.

Heater activation time frame - Specifies under which time frame FleetHeat monitors the conditions for an optimal starting time. This is managed in unit profiles.

Unit deactivation - When the heater is set to deactivate, also managed in the unit profile.

Source - From where the departure times are fetched, for example from Klartext or Hastus.

Import - You have 2 options for importing your departure times.
You can choose to import it manually via excel or automatically via your schedule provider, such as Klartext or Hastus.

2.3 CREATE EXCEL FILE FOR IMPORT

This is how you create your import file:
Copy the bus number and departure time from your spreadsheet. Paste bus number in column A and departure time in column B (see below). Text in other programs will be ignored by the program.
Save file (Excel XML*)

**In open office the format is Microsoft excel 2003 XML, in excel 2010-2016 it is XML spreadsheet 2003*

	A	B	C	D	E	F	G	H	I	J
1	4114	12:00								
2	4117	12:10								
3	3887	12:18								
4	4110	12:20								
5	3888	12:35								
6	3894	12:45								

When the file is created it is imported as follows:

1. Choose schedules
2. Click on import
3. You can choose “schedule contains date” if the excel file contains that

   For example 2020-05-1 05:30

   Or choose “enter date manually” - choose your date and paste the departure time

   For example 05:30
4. Browse - choose the file you have created and open
5. Click on validate and import
6. Click on import

2.4 UNIT PROFILES

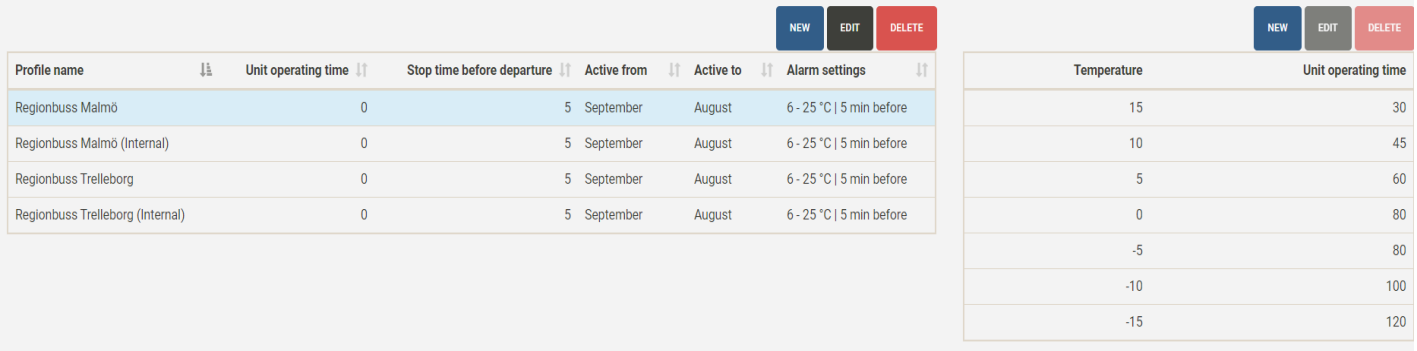

Under unit profiles the heater settings are managed.
The unit profile defines when the heater should be activated and you can also ad temperature rules.
The profile has the following basic areas.

1. Profile name - Choose a name for your profile.

2. Unit operating time - If you enter for example 60 minutes here, the heater will always start 60 minutes before departure.

3. Stop time before departure - Number of minutes before departure the heater is inactivated.

4. Active from - Indicates the month from which the heater profile is activated.

5. Active to - Indicates the month to which the heater profile remains activated.

6. Alarm settings - Set alarms to be notified when the temperature is too low or too high.

Enter the number of minutes before departure you want the alarm and at what temperature levels you wish to receive the alarm.

7. Temperature - Enter the time for how long the heater will run at a certain temperature.

When the temperature is equal to or lower than this number, the heating time defined in the rules is used. Choose between using the temperature inside the bus or the outside temperature at the depot.

2.5 BUS DEPOTS

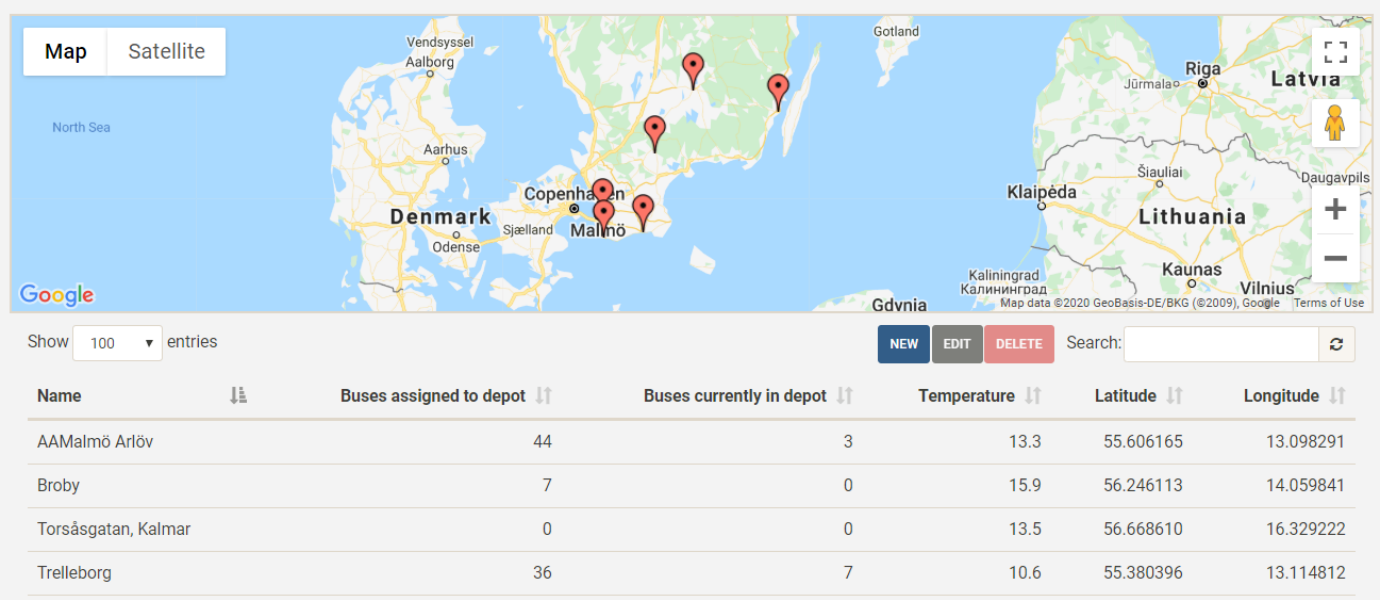

Show 100 entries NEW EDIT DELETE Search:

Name	Buses assigned to depot	Buses currently in depot	Temperature	Latitude	Longitude
AAMalmö Arlöv	44	3	13.3	55.606165	13.098291
Broby	7	0	15.9	56.246113	14.059841
Torsåsgatan, Kalmar	0	0	13.5	56.668610	16.329222
Trelleborg	36	7	10.6	55.380396	13.114812

Each bus is assigned to a bus depot. When you create a depot you give it a name and choose its location on the map. By placing the depot on the map the system can show the exact temperature at the depot and you can also see if the bus is currently at the depot.

2.6 ALARMS

Here all the alarms are listed for the buses that did not reach the temperature set in the unit profile. This function is used to find the optimal heating time before departure.

2.7 REPORTS

See the history of temperature and battery level in your buses.
In unit activity, you can see how much the heater has been used via FleetHeat.
In unit utilization, you can see the total running time for the heater.
This way you can see how much the heater has been used manually by the drivers.

2.8 MAP

Positioning - Quick and clear overview of your vehicles. See speed, position and travel records.

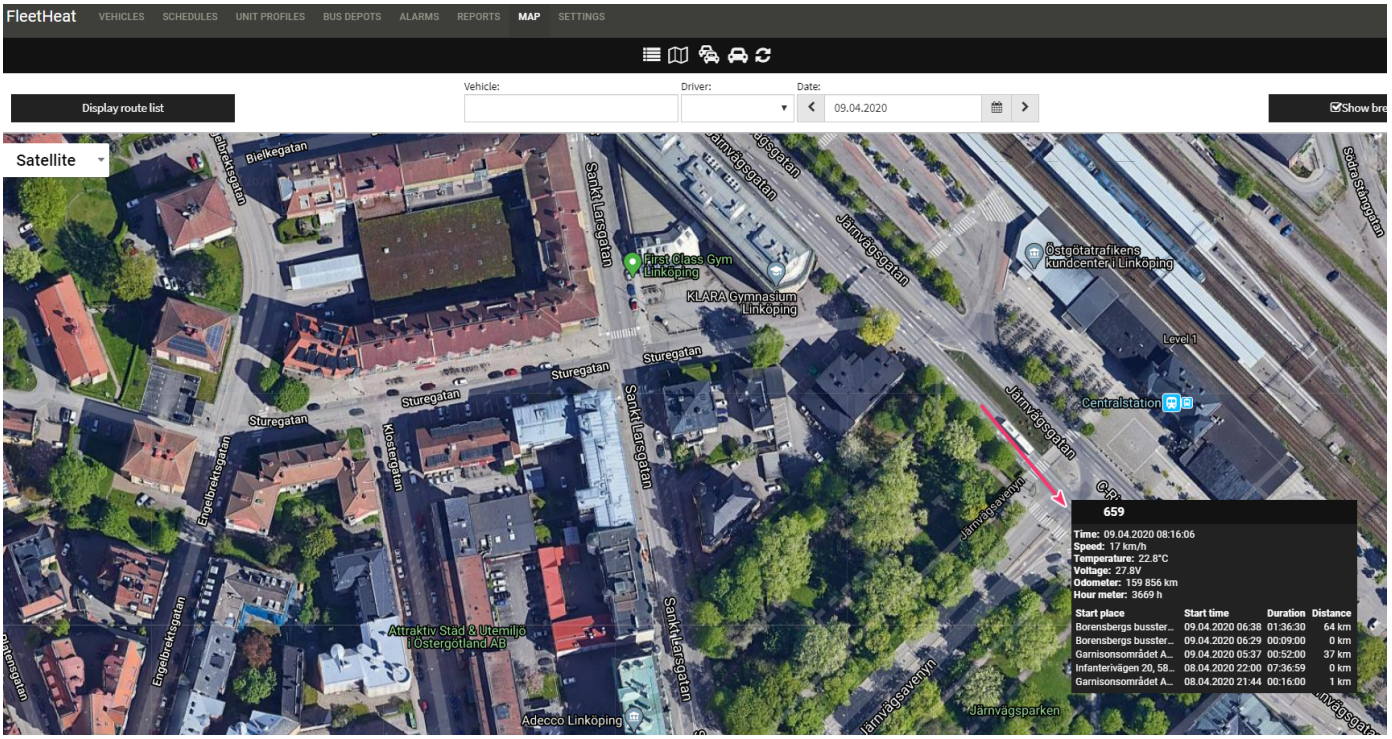

Real-time monitoring of your Bus fleet.

2.9 ECONOMY

See how much fuel each heater has consumed and calculated cost.

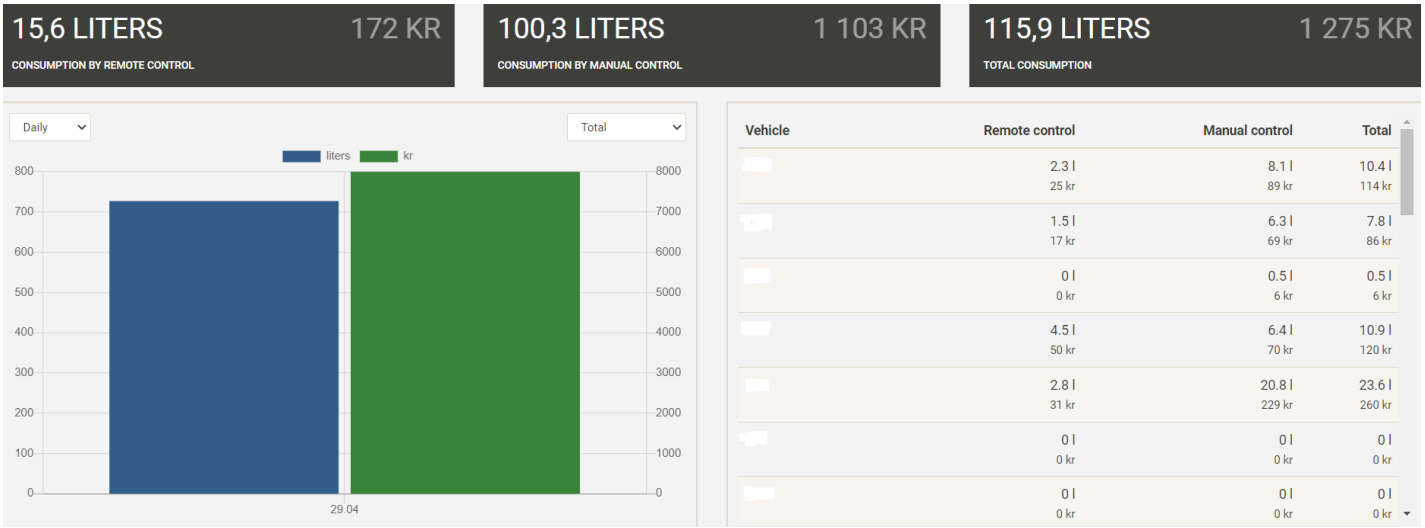

3.0 SETTINGS

The system alarms if the battery level is too low.
Here you can preset at what level you want to receive an alarm.
If you want an email notification when the battery level is too low you can enter that here.

3. INSTALLATION GUIDE

How to connect FleetHeat to your fuel heater

FleetHeat is easiest connected via the heaters timer unit.
The LMU unit should be mounted in a place where it has a good cellular network and GPS connection.

Parts:
LMU-2630
Wiring harness
Digital temperature sensor DS18B20

Connection from relay to heater

The following steps show how to connect the two wires going from the relay socket to the heater:

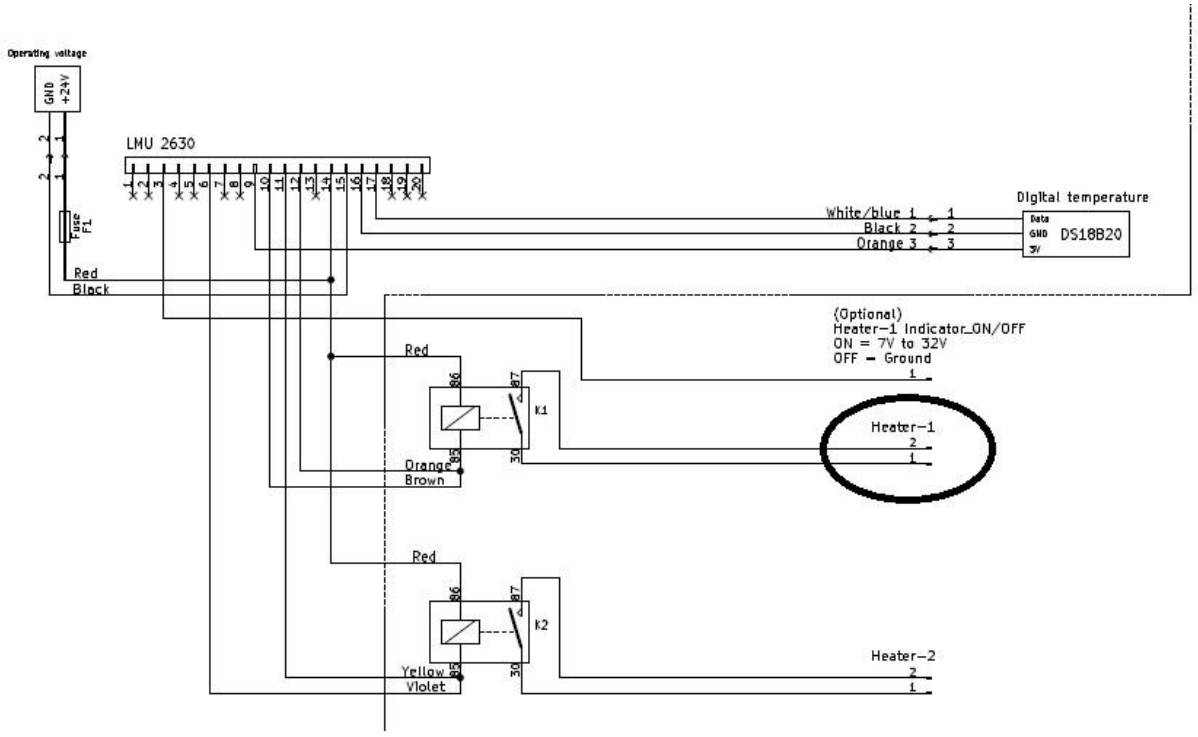

1. Wires are connected to heads - "spade connectors".
These are specially selected and targeted to fit the relay socket.
There is a notch inside the socket and the small clip of the spade connector goes to the notch and keeps the wire and connector fixed inside.

2. When the connectors are ready, the two wires/connectors are put into the relay socket.
There is a silent click when the clip goes into the notch and then the wire cannot be pulled out from the relay socket.

3. The relay is pressed firmly into the relay socket.

The thickness of the wire is AWG 18, the choice can be made between AWG 16-20.
The crimp tool should be selected according to the wire thickness between the AWG 16-20

The crimp tool used in the example below is from Molex

Relay Socket , with wires from LMU connected to socket

1

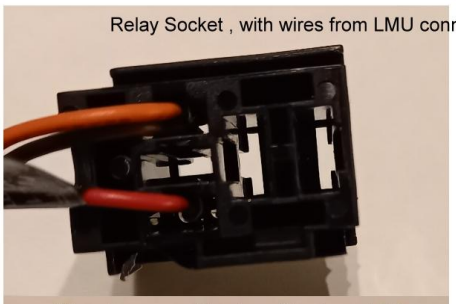

Wires to connect heater with crimped 6.3mm connectors

2

Wires are connected using Molex crimp tool **3**

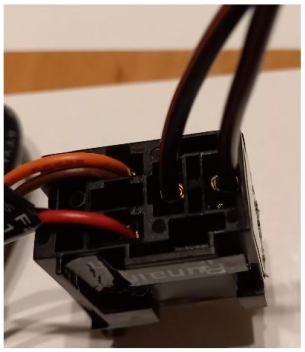

4

When wires are crimped, the connectors are put to relay-socket.

The small clip at the back of the connector clicks in and keeps the connector in.

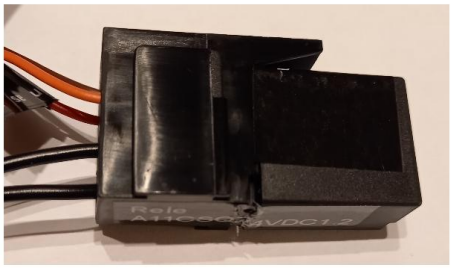

5

When wires are in the relay-socket, press the relay tightly on the socket

TEMPERATURE SENSOR

Install the temperature sensor near the driver's seat, where the bus temperature is estimated to even. For example 1 meter above the floor and 0.5 meters out from the nearest wall.
It's important to make sure that the sensor is not exposed to direct sunlight or something that would affect the sensor, for example a fan.

ORANGE PIN9 3,1V VDD wire to sensors power wire = Red
WHITE/BLUE PIN17 to sensor's data wire = Yellow or White
BLACK PIN16 to sensor's ground wire = Blue or Black

LMU-2630™ Status LEDs
Led 1 – Orange – Cellular network

Cellular Network Condition	Led 1 – light
Connection off	Off
Connection on – Searching	Slow blinking
Network available	Fast blinking
Registrered but no Inbound Acknowledgement from Data Server	Alternates from Solid to Fast blink every 1 s
Registrered and received Inbound Acknowledgement from Data Server	Solid

Led 2 – Green – GPS

GPS Condition	Led 2
GPS Off	Off
GPS On	Slow blinking
GPS Time Sync	Fast blinking
GPS Fixed	Solid

LMU 2630 20 pin microfit connector

Pin	Signal	Description	Color	Input or Output	*Connection to the vehicle - RTPro Oy - updated 18.12.2017*
1	GND	Ground	Black	Ground	
2	OUT-0	Output 0 –Starter Disable Relay Driver	Green	Output	(Reserved for Aggressive driving indicator led)
3	IN-1	Input 1 – Digital Input	Blue	Input	(Reserved for Alcometer alarm on/off detector)
4	SER_IN	Serial Input	Blue	Input	
5	ADC-1	Analog to Digital Input 1	Pink	Input	
6	IN-3	Input 3 – Digital Input	Violet	Input	
7	IN-4	Input 4 – Digital Input	Grey	input	
8	IN-0	Input 0	White	Input	*(Versions, before September 2016: Heater ON/OFF detector)*
9	**VDD**	**VDD Reference Output (20-25mA Max)**	**Orange**	**Output**	***1-wire temperature sensor power 3,1V***
10	**OUT-1**	**Output 1 – Digital Output (Open Collector)**	**Brown**	**Input / Output**	***Heater – ON/OFF switch relay: 150 mA connects to OMRON G6L-1F-DC24 max 1A/60VDC***
11	OUT-2	Output 2 – Digital Output (Open Collector)	Yellow	Output	*(Heater 2 - switch relay: 150 mA – reserved for future use)*
12	**IN-2**	**Input 2 – Digital Input**	**Orange**	**Input**	***Heater ON/OFF detector***
13	SER_OUT	Serial Output	Green	Output	
14	**VCC**	**Primary Power Input**	**Red**	**Power**	***Power 12V or 24V***
15	**GND**	**Primary Ground**	**Black**	**Ground**	***Ground***
16	**1BB-GND**	**1 Bit Bus Ground**	**Black**	**Ground**	***1-wire temperature sensor ground***
17	**1BB-D**	**1-Bit Bus Data**	**White / Blue**	**Input / Output**	***1-wire temperature sensor data***
18	Aux - TxD	Aux Port 2 - Transmit Data	White / Orange	Input	
19	Aux -GND	Aux Port 2 - Ground	Black	Ground	
20	Aux - RxD	Aux Port 2 - Receive Data	White / Yellow	Output	

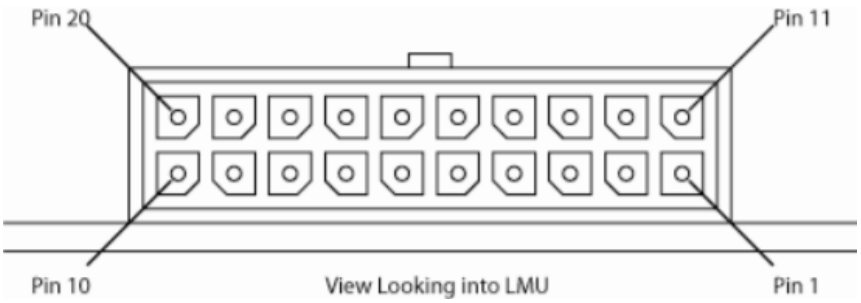

Digital outputs:

When switched on it connects to ground. Allowed maximum current 150 mA at 12V

WIRE DIAGRAMS

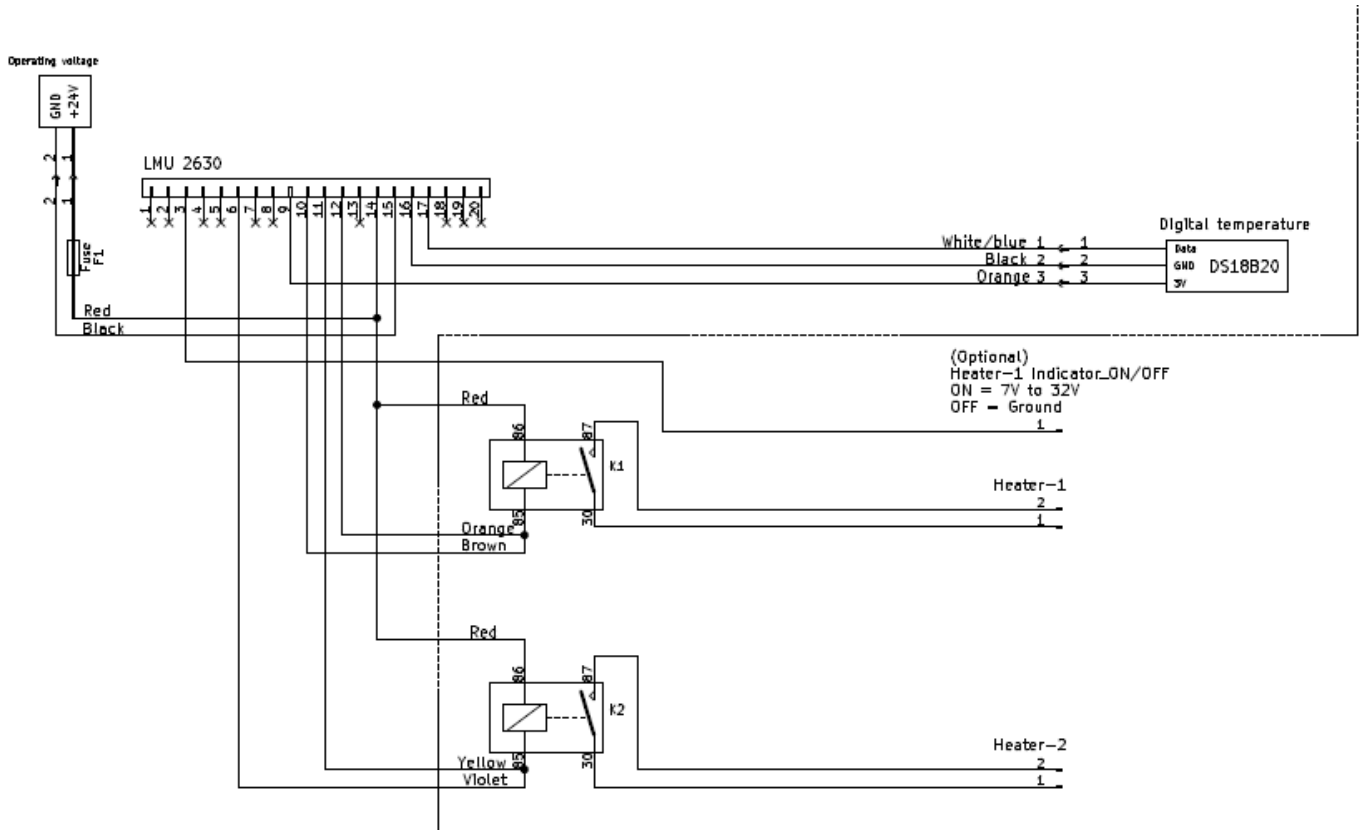

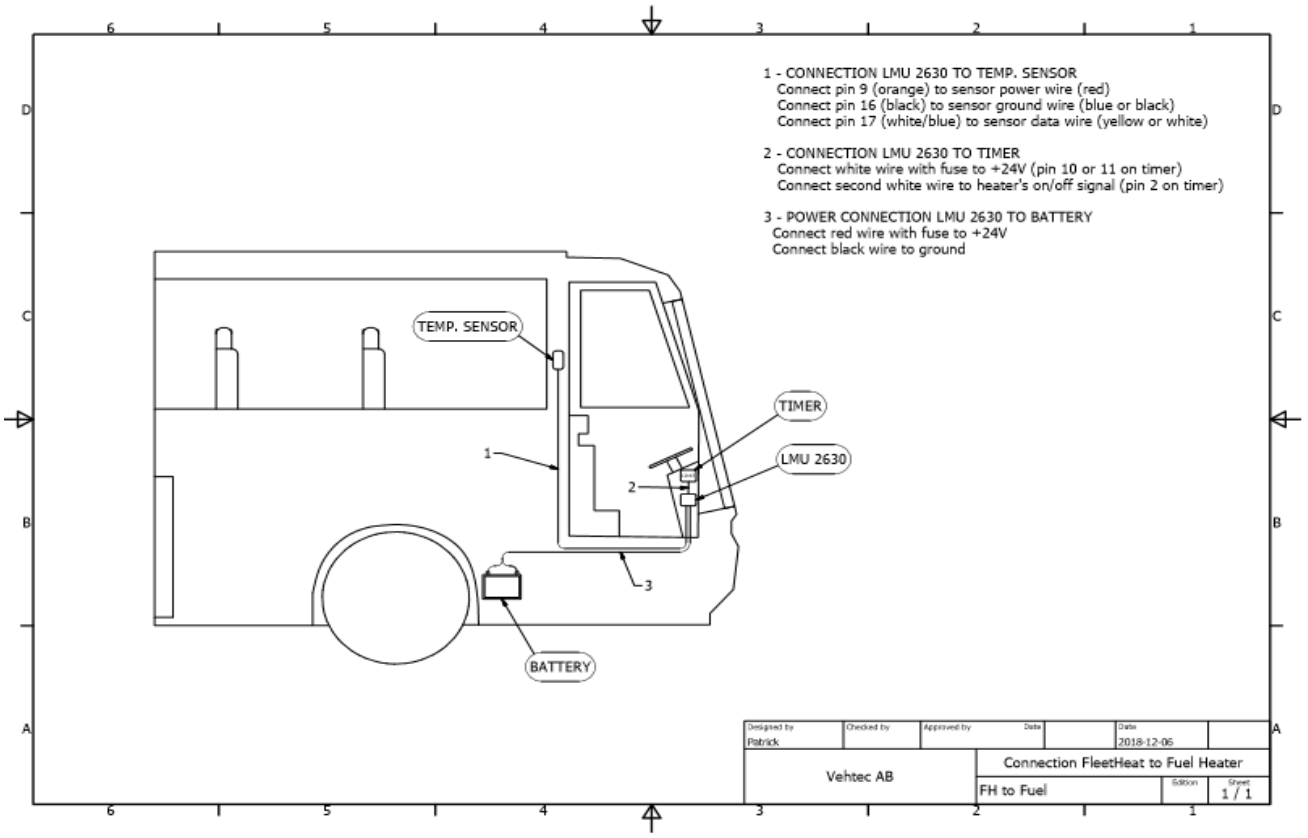

INSTALLATION TIPS

The unit has internal antennas for GPS satellite reception and GSM communication. The GSM signal is coming laterally from land stations and the GPS signal is coming from all directions from the sky. Install the GPS device to a constant 9V–32V DC power.

Install the GPS device to a place where the GSM and GPS signals are available. The signals can be blocked if the unit is installed under a metal cover or inside a metal box. One ideal location to mount the unit is under the dashboard.

The GSM and GPS signals can be tested with a mobile phone. The GSM signal level can usually be seen all the time on the phone's main screen. The GPS signal strength can be tested with a mobile phone using common programs, available from Google Play or Apple Store.

Make sure the GPS system is operating correctly after the installation. When power is connected, both of the lights start blinking and when GSM data network is connected, the GSM-led (orange) stops blinking and the light is on continuously. After a while, 60-300 seconds, the GPS-led (green) stops blinking and the light is on continuously.

The unit should be installed with the technical label facing down. The antennas are on the other end and on the upper side of the unit.
If the unit is to be installed under the vehicle's dashboard, mount it as near the open air as possible, not too deep under the dashboard.

Do not place it directly under a metal panel as this will affect the GPS and GSM performance. Plastic and glass do not block the signals unless they are metal-coated such as many solar glass windscreens.
Do not install the unit where it will be subjected to direct sunlight to prevent the temperature of the unit to rise or drop depending on sunlight.

4. TROUBLESHOOTING

PROBLEM	SOLUTION
The heater does not start with FleetHeat.	1. Check if the heater can be started manually. - Heater can not be started manually = check the heater. - Heater can be started manually = continue troubleshooting. 2. Check fuses on wiring. 3. Check wiring connections. - Make sure that the white wire without a fuse is connected to the heaters on/off signal. - Make sure that the fused white wire is connected to +24V 4. Check if the switch signal is continuous or temporary. - If the heater uses a continuous signal it should start using the relay delivered with FleetHeat. - If the heater uses a temporary signal the behavior of the relay needs to be changed to handle the signal. 5. Check that the relay is working - Measure with a multimeter between the two white wires when the device is only connected to the battery and the heater is set to “on” in FleetHeat. If the relay works properly, low resistance (approx 6 ohms) will be displayed when the heater is set to “on”. The circuit must be broken when the heater is set to “off”. 6. Check that the heater does not require a higher current than the relay is capable of transmitting (max 1A). If more than 1A is needed, ad one more relay.

PROBLEM	SOLUTION
Fleetheat loses contact.	1. Check the placement of the LMU unit. - *Make sure that the unit is not placed under a metal cover or metal box that can block the signal.* - *Place the unit with the white sticker with technical info facing down, as the antennas are on the opposite side.* 2. Does the unit's lights (orange, green) have a solid light on? • See page 11. 3. Control the contact signal on GPS and Network where the bus is located. - *GSM and GPS signals can be tested with a cellphone. The GSM-signal strength can normally be seen on the main menu of the phone. The GPS signal can be tested with a cellphone through common apps, available on Google Play or Apple Store.*

PROBLEM	SOLUTION
Spreadsheets can not be imported.	Make sure that the spreadsheet is imported via Excel in XML format. In Open office it is called Microsoft excel 2003 XML, in excel 2010 - 2016 it is called XML spreadsheet 2003.

PROBLEM	SOLUTION
I can't use start via temperature control	1. Control that a Unit Profile is created. 2. Make sure the bus is connected to a unit profile. 3. For control via outside temperature, the bus has to be assigned to a depot. For control via inside temperature, the bus has to be assigned to a unit profile.